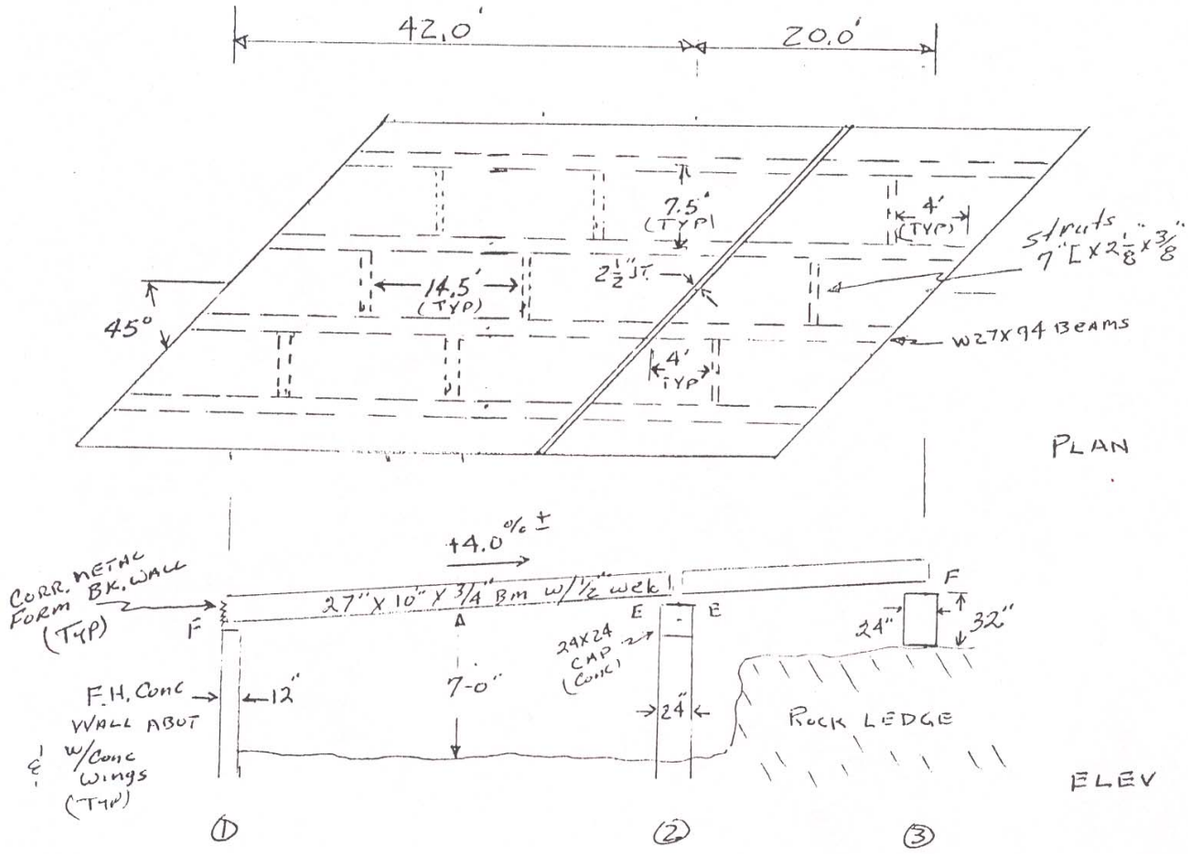

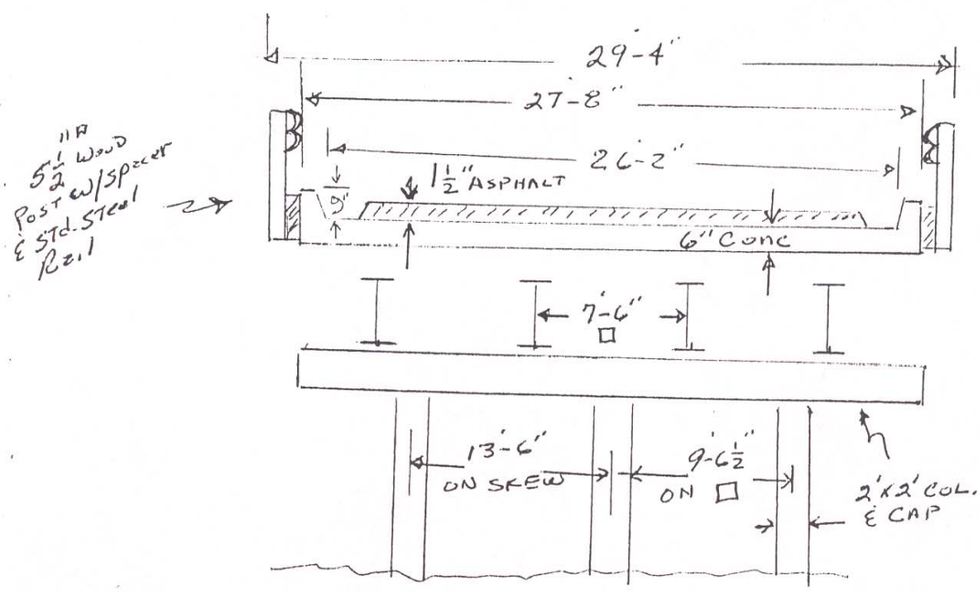

SECTION @ Bent #2

BRIDGE INSPECTION REPORT
NBIS-FORM III

Inspected by K.L.B.
Date 12/04/2006
Dist 8 Co 58 POPE Rte 333 Sect. 01/0 Log 8.83 Bridge M4000